CS 725/825 & IT 725
Lecture 7
Networking Fundamentals

September 20, 2023

Example questions

- Range of 132.177.4.0/26?

  132.177.4.0 → 132.177.4.63

- Prefix for range 132.177.2.192 → 132.177.2.223?

  132.177.2.192/27

Range of 132.177.4.0/26

Parts of an IP Address

- An IP (IPv4) address consists of four octets (groups of 8 bits) separated by dots.
- Each octet can range from 0 to 255.
- Example: 132.177.4.0

Continued…

- The number following the slash (in this case, 26) tells us how many bits are fixed or "masked" from the beginning of the IP address.

- These fixed bits identify the "network portion" of the address.

- The remaining bits (32 - 26 = 6 in this example) identify the "host portion" and can vary.

Conversion to Binary

- To understand what the 26 means, let's convert the IP address to binary:
- 132 in binary is 10000100
- 177 in binary is 10110001
- 4 in binary is 00000100
- 0 in binary is 00000000
- Full IP in binary: 10000100.10110001.00000100.00000000

Applying the Subnet Mask

- The subnet mask of /26 means the first 26 bits are fixed. In binary, this looks like:
- 10000100.10110001.00000100.00
- The remaining 6 bits (000000) can vary

Calculating the Range

- To find the range of IP addresses, we look at the smallest and largest values that the last 6 bits can have:
- Smallest: 000000
- Largest: 111111

Conversion Back to Decimal

- Smallest address: 10000100.10110001.00000100.00000000 converts back to 132.177.4.0
- Largest address: 10000100.10110001.00000100.00111111 converts back to 132.177.4.63

Finally

- So, the range of 132.177.4.0/26 is 132.177.4.1 to 132.177.4.62, Since the first and last are reserved.

Prefix for range 132.177.2.192 → 132.177.2.223

Convert IP addresses to binary

- 132.177.2.192 in binary is 10000100.10110001.00000010.11000000
- 132.177.2.223 in binary is 10000100.10110001.00000010.11011111

Identify the common fixed bits

- By comparing these two binary IP addresses, we can identify the common fixed bits.
- Common fixed bits: 10000100.10110001.00000010.110
- This common part consists of 27 bits, and the remaining bits vary.

Formulate the CIDR notation

- The first IP address in the range is 132.177.2.192, and the common fixed part consists of 27 bits.
- Therefore, the CIDR notation that represents this range is 132.177.2.192/27.

Example questions

- Subnet mask for prefix length /17?

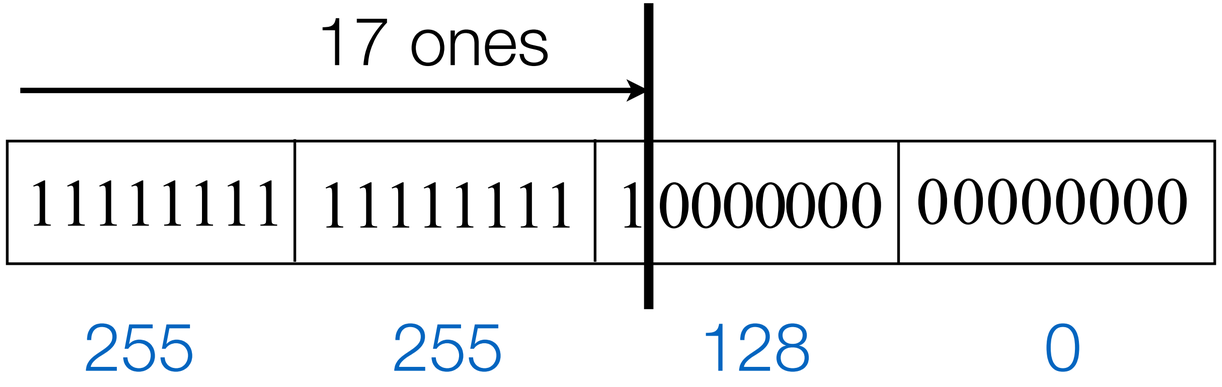

- Prefix length for subnet mask 255.255.255.192?

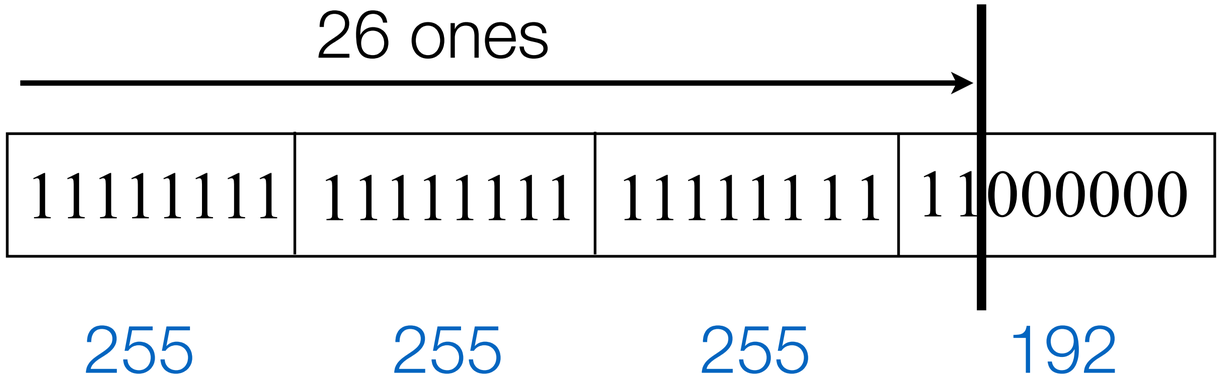

Subnet mask for prefix length /17

What is a Subnet Mask?

- A subnet mask helps determine the network and host portions of an IP address. It is a 32-bit number, like an IPv4 address.

Question — Subnet Mask for Prefix Length /17

- A prefix length of /17 means that the first 17 bits of the subnet mask are set to '1'. The remaining bits are set to '0'.

Binary Representation

- The subnet mask in binary is:
- 11111111 . 11111111 . 10000000 . 00000000
- First octet: 8 bits, all '1's.
- Second octet: 8 bits, all '1's.
- Third octet: 1 bit '1', 7 bits '0'.
- Fourth octet: 8 bits, all '0's.

Decimal Representation

- To convert to decimal:
- First octet: 11111111 is 255
- Second octet: 11111111 is 255
- Third octet: 10000000 is 128
- Fourth octet: 00000000 is 0
- So, the subnet mask for /17 is 255.255.128.0.

Prefix length for subnet mask 255.255.255.192

Prefix Length

- Step 1: Convert the subnet mask to binary.
- 255 = 11111111
- 255 = 11111111
- 255 = 11111111
- 192 = 11000000
- So, the binary form is:
- 11111111.11111111.11111111.11000000

Count '1' bits

- Step 2: Count the number of '1' bits in the binary representation.
- There are 26 '1' bits.
- Thus, the prefix length is /26.

Combining Prefixes

Why Combine Prefixes?

- Combining prefixes is usually done to simplify routing tables
- By aggregating smaller contiguous networks into a larger one, you reduce the number of entries required in the routing table

Combining prefixes

132.177.0.0/24	Range 132.177.0.0 - 132.177.0.255
132.177.1.0/24	Range 132.177.1.0 - 132.177.1.255

Combining prefixes

132.177.0.0/24
132.177.1.0/24

132.177.0.0/23

Range 132.177.0.0 - 132.177.1.255

Combining prefixes

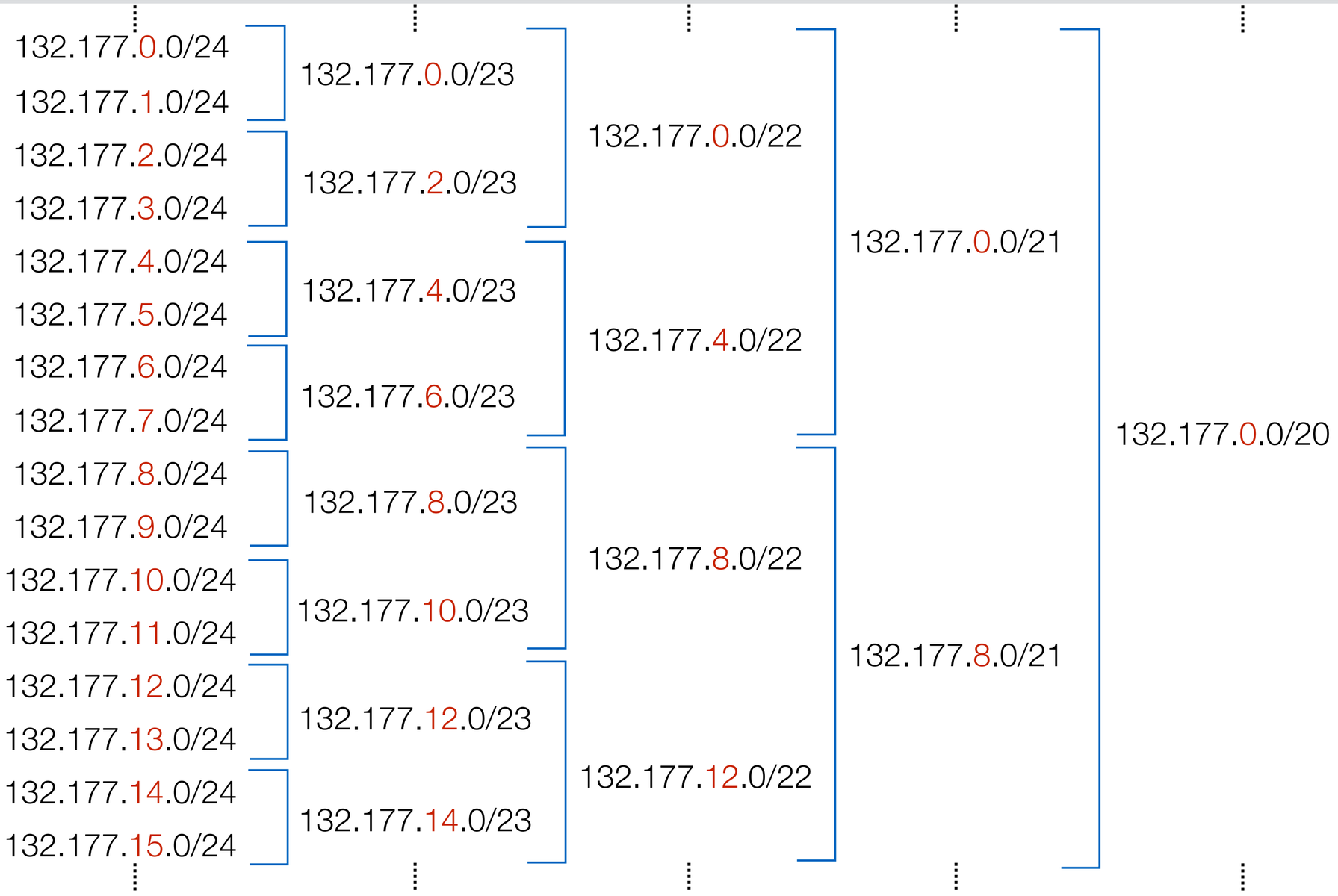

Static IP Routing

Static IP Routing

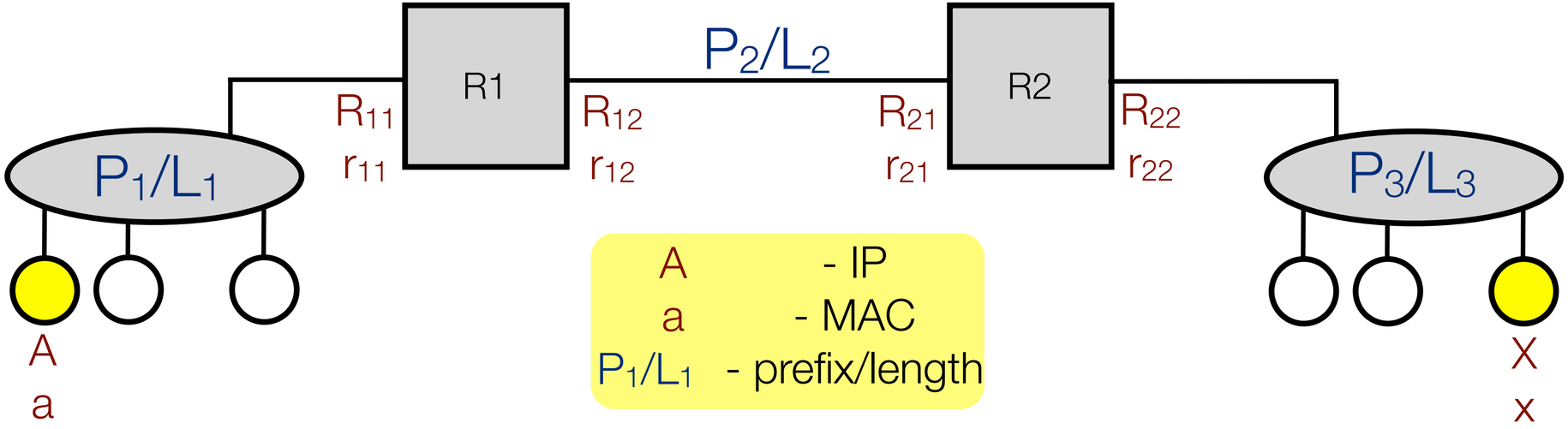

For example: P_1/L_1 10.0.1.0/24

A 10.0.1.101 R_{11} 10.0.1.1

a f8:ff:c2:24:6a:0f r_{11} aa:c2:74:08:cf:12

Static IP Routing

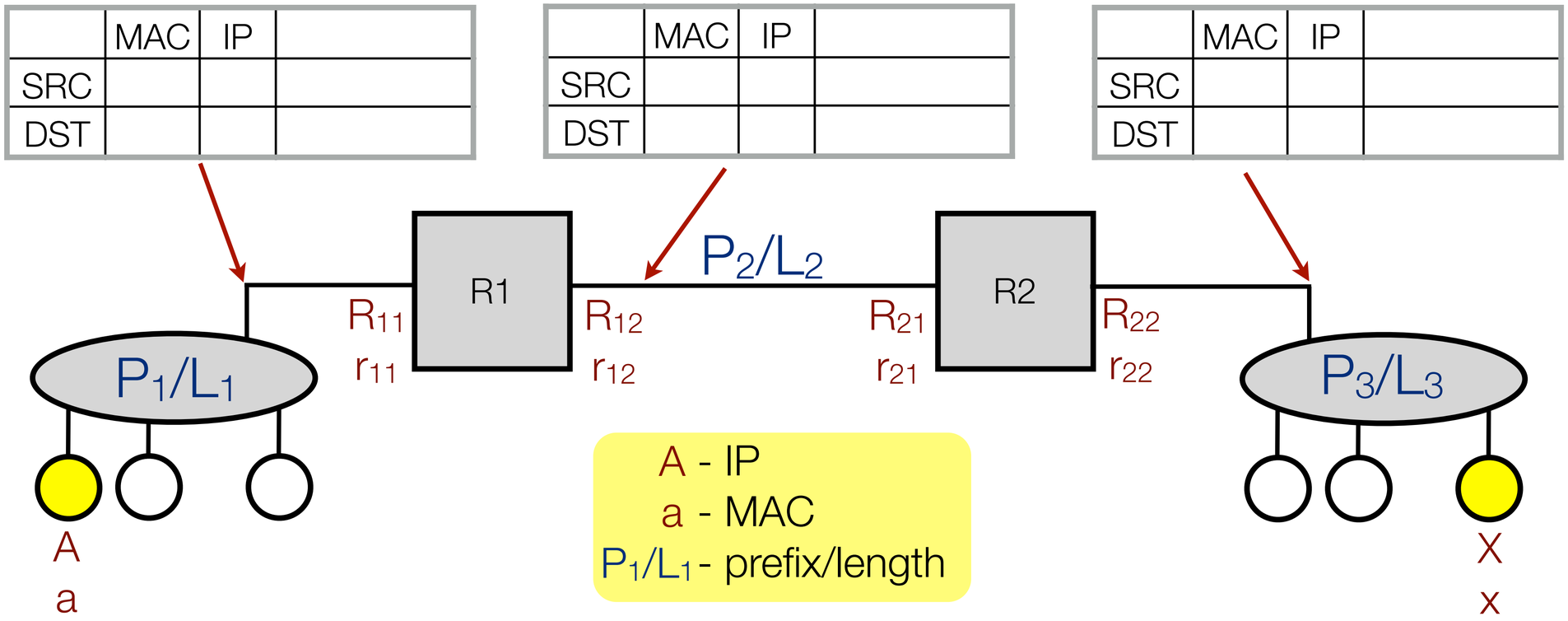

Static IP Routing

	MAC	IP	
SRC	a	A	
DST	r_{11}	X	

	MAC	IP	
SRC	r_{12}	A	
DST	r_{21}	X	

	MAC	IP	
SRC	r_{22}	A	
DST	x	X	

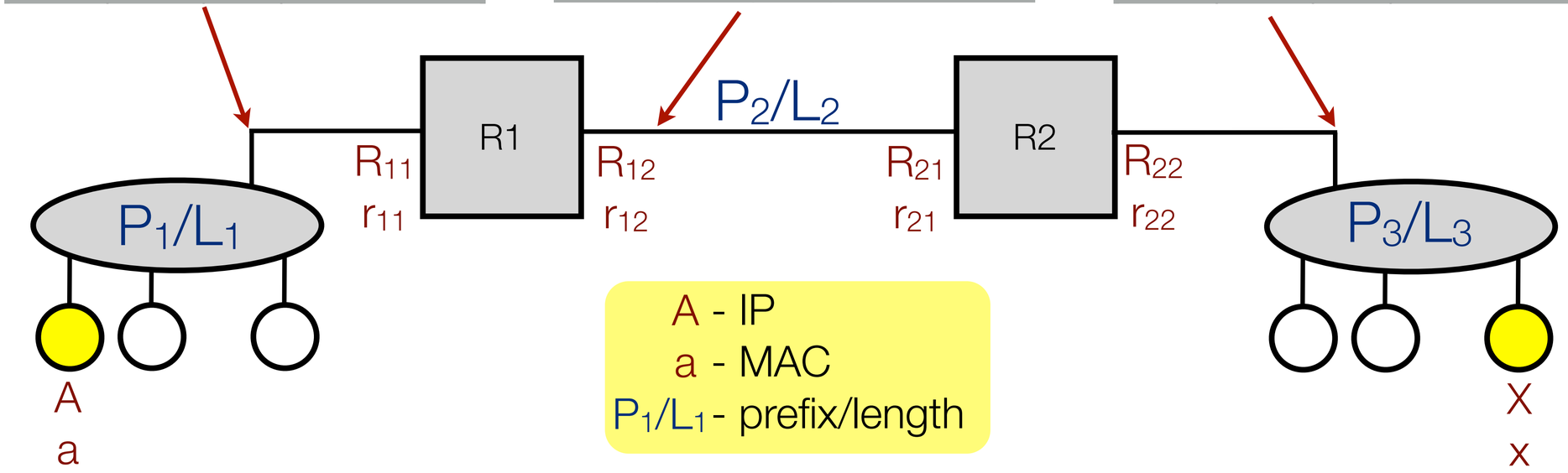

A - IP
a - MAC
P_1/L_1 - prefix/length

Static IP Routing

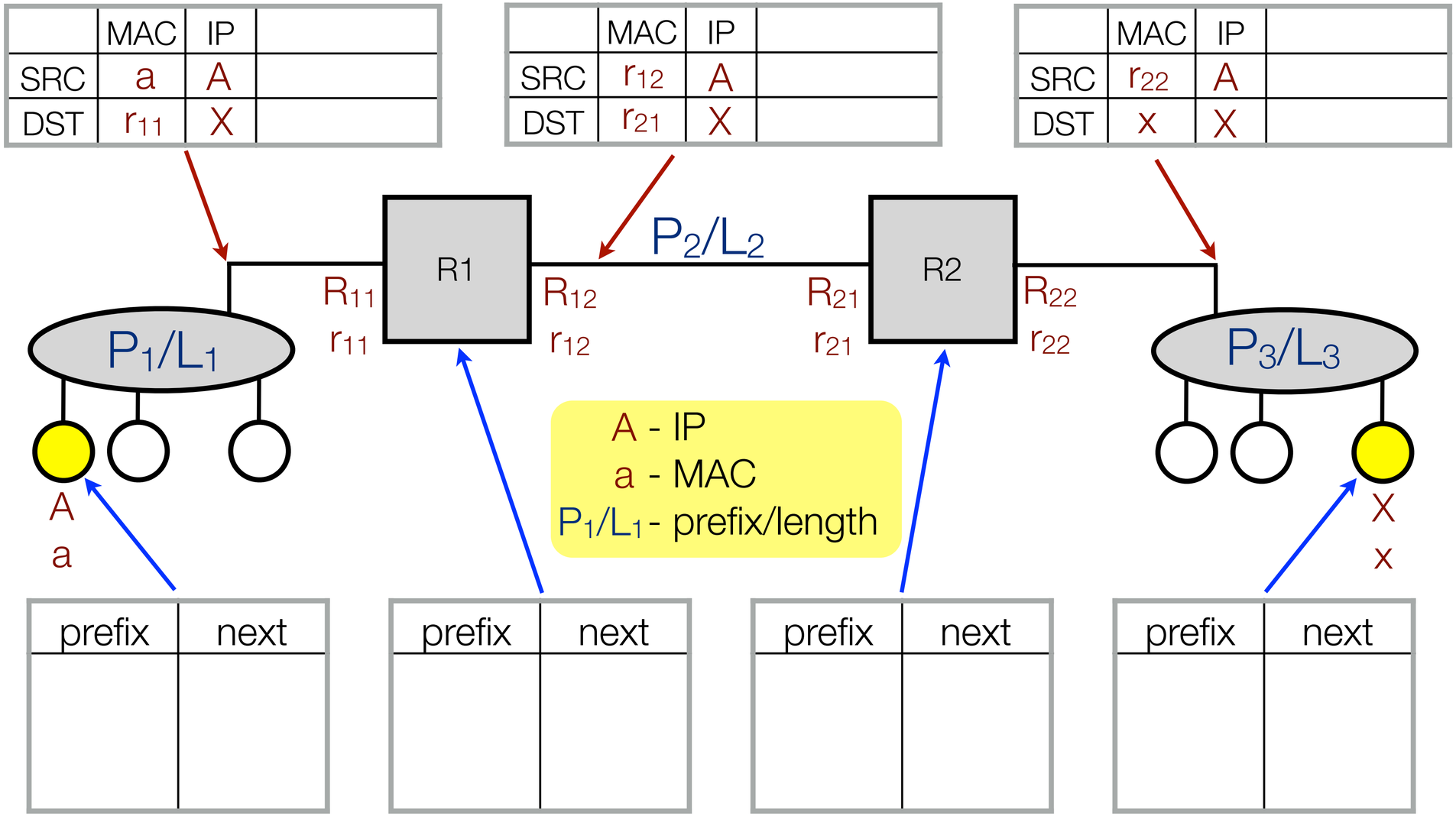

Static IP Routing

	MAC	IP	
SRC	a	A	
DST	r_{11}	X	

	MAC	IP	
SRC	r_{12}	A	
DST	r_{21}	X	

	MAC	IP	
SRC	r_{22}	A	
DST	x	X	

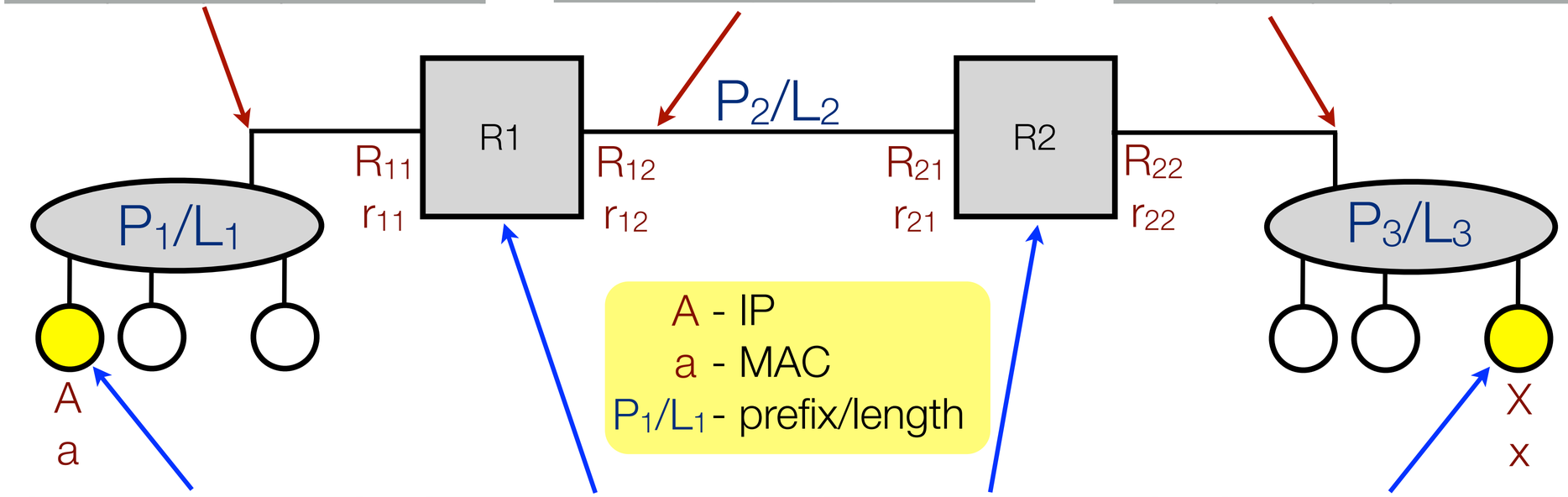

prefix	next
P_1/L_1 P_3/L_3	local (a) R_{11}

prefix	next
P_3/L_3 P_2/L_2 P_1/L_1	R_{21} local (r_{12}) local (r_{11})

prefix	next
P_3/L_3 P_2/L_2 P_1/L_1	local (r_{22}) local (r_{21}) R_{12}

prefix	next
P_3/L_3 P_1/L_1	local (x) R_{22}

Static IP Routing

	MAC	IP	
SRC	a	A	
DST	r_{11}	X	

	MAC	IP	
SRC	r_{12}	A	
DST	r_{21}	X	

	MAC	IP	
SRC	r_{22}	A	
DST	x	X	

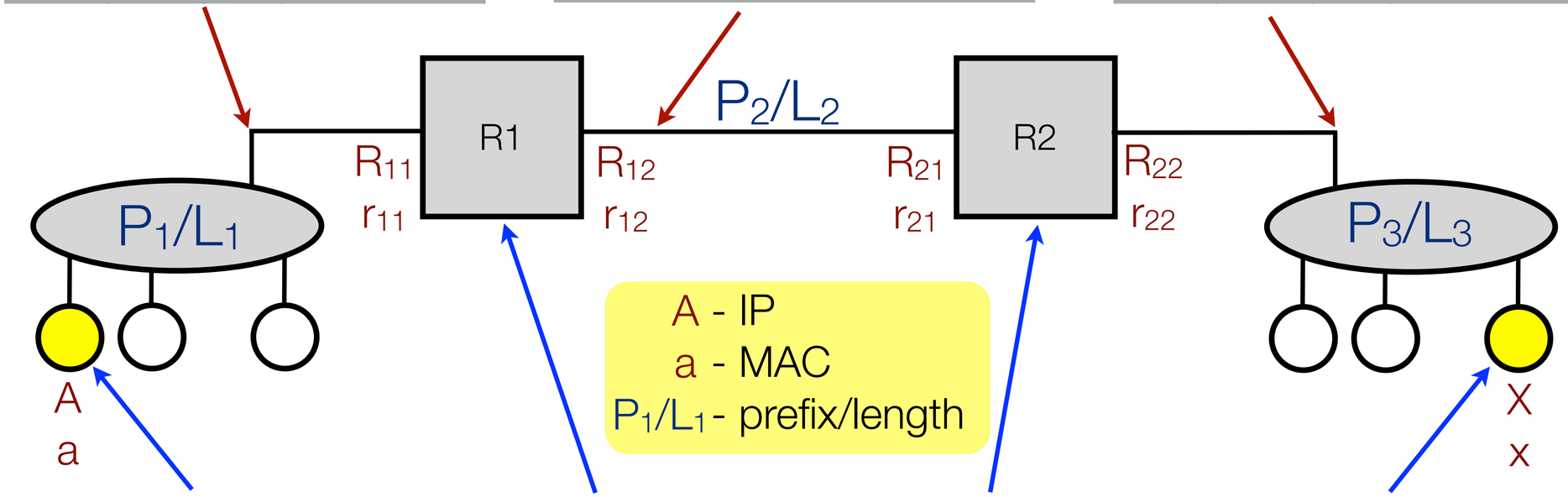

prefix	next
P_1/L_1	local (a)
~~P_3/L_3~~	~~R_{11}~~
0/0	R_{11}

prefix	next
P_3/L_3	R_{21}
P_2/L_2	local (r_{12})
P_1/L_1	local (r_{11})

prefix	next
P_3/L_3	local (r_{22})
P_2/L_2	local (r_{21})
P_1/L_1	R_{12}

prefix	next
P_3/L_3	local (x)
~~P_1/L_1~~	~~R_{22}~~
0/0	R_{22}

Routing loop

Routing loop

	MAC	IP	
SRC	a	A	
DST	r_{11}	X	

	MAC	IP	
SRC	r_{12}	A	
DST	r_{21}	X	

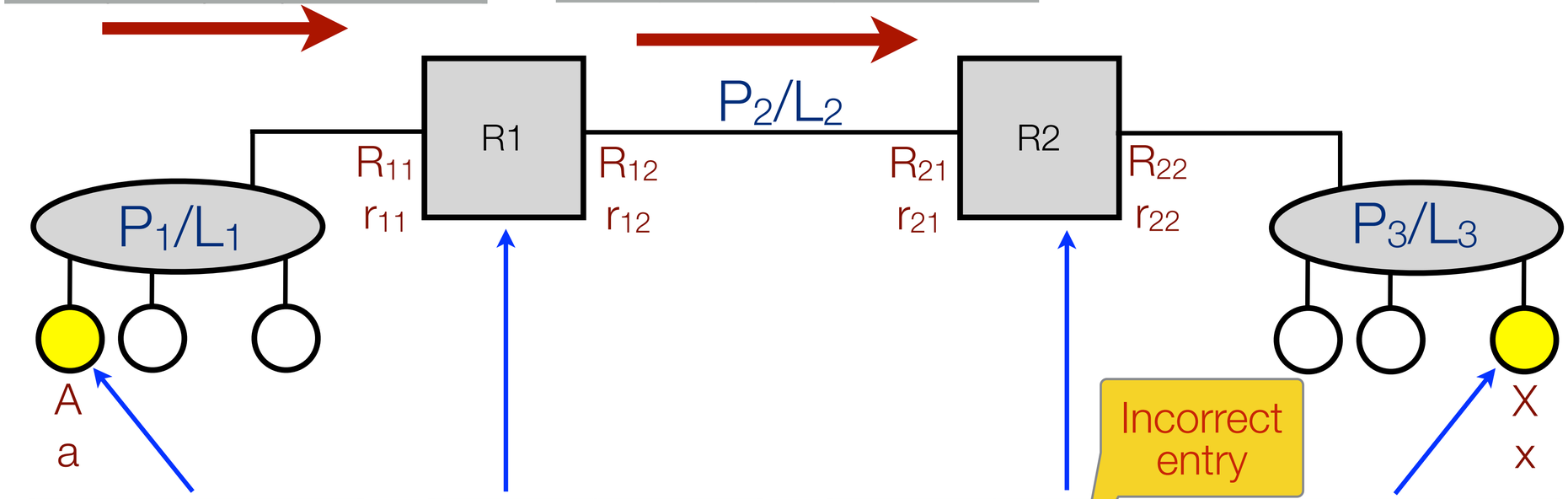

prefix	next
P_1/L_1 0/0	local (a) R_{11}

prefix	next
P_3/L_3 P_2/L_2 P_1/L_1	R_{21} local (r_{12}) local (r_{11})

prefix	next
P_3/L_3 P_2/L_2 P_1/L_1	R_{12} local (r_{21}) R_{12}

prefix	next
P_3/L_3 0/0	local (x) R_{22}

Routing loop

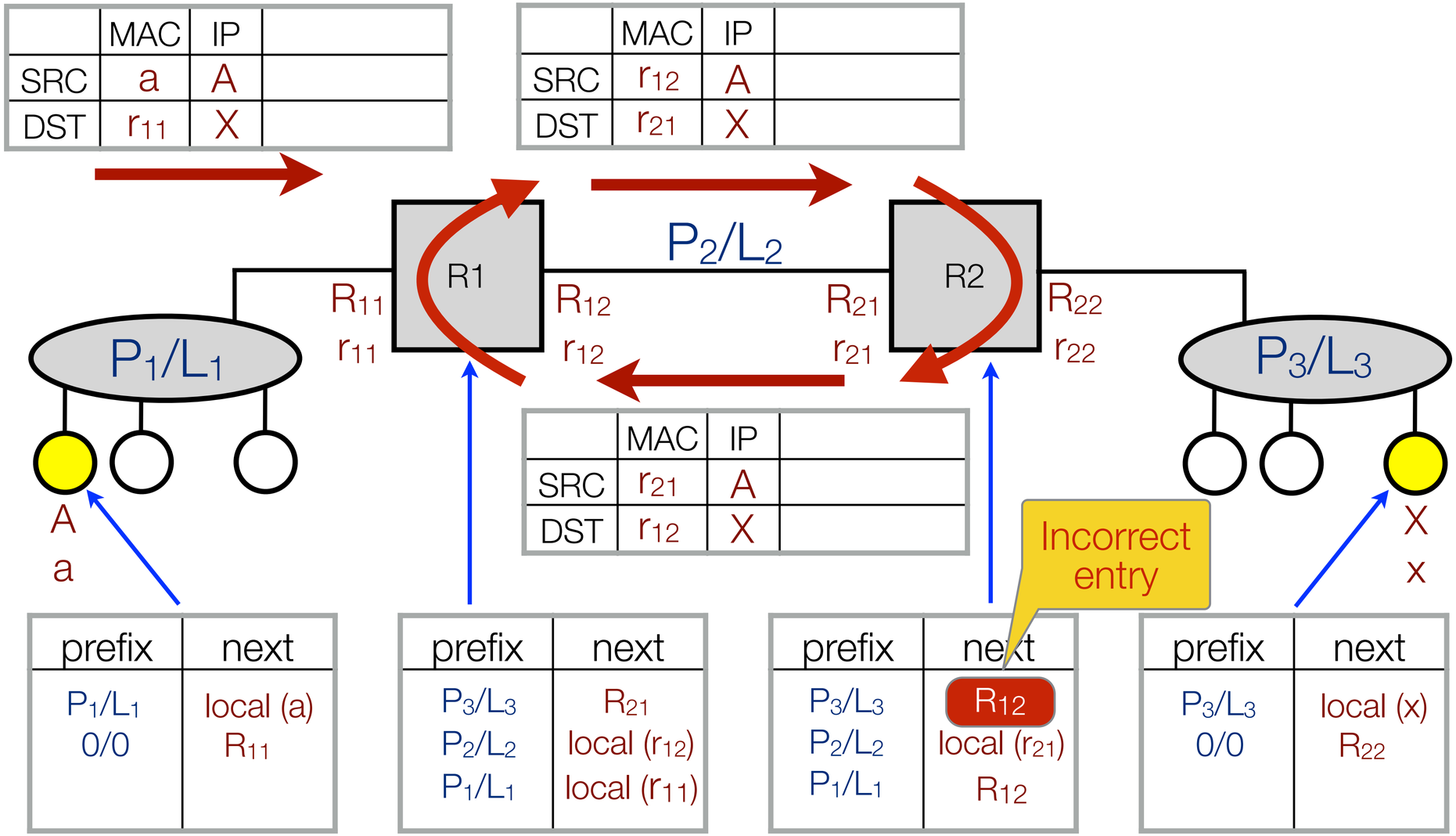

No route to host

Photo courtesy of Chip McNaughton, UNH-CS

Routing example

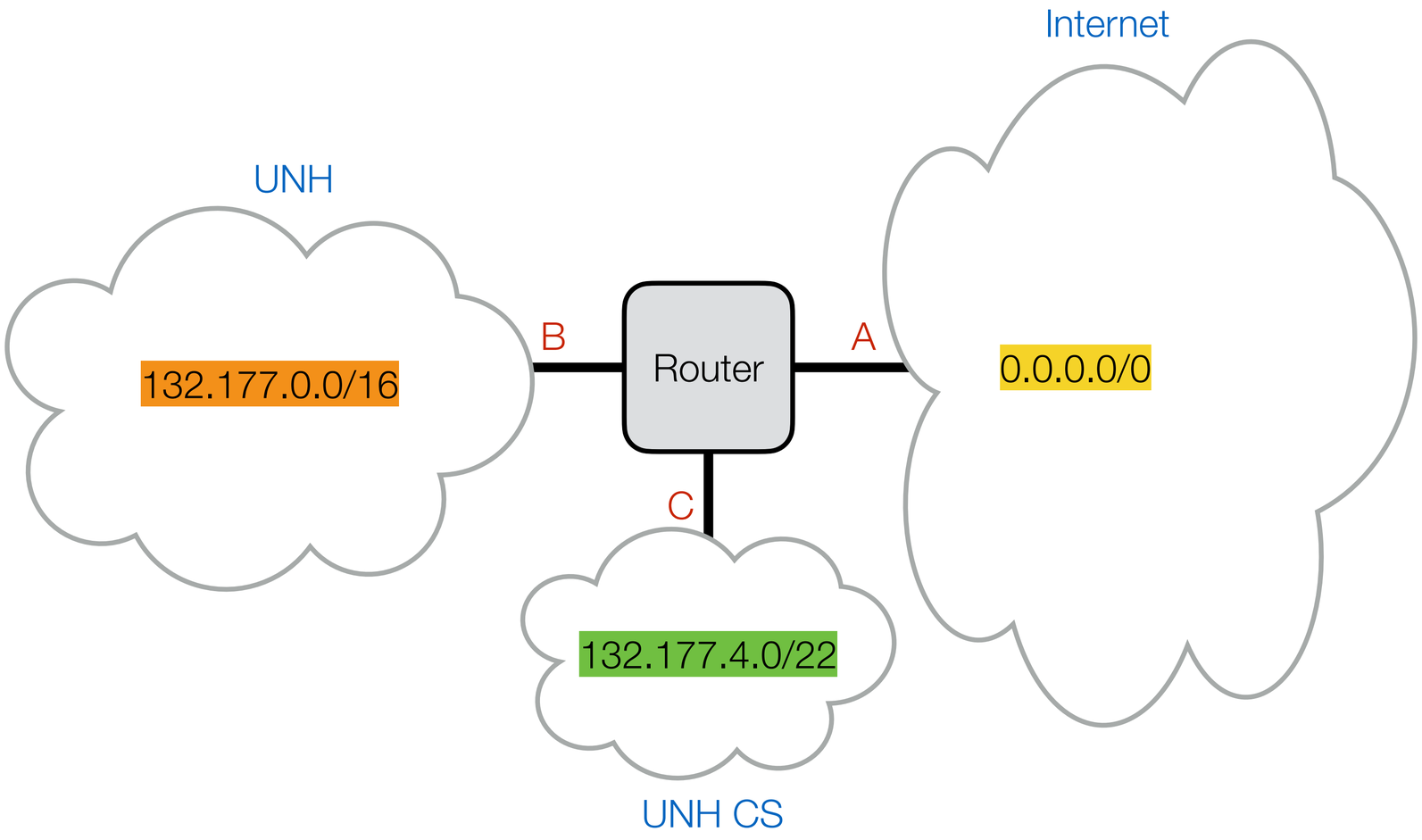

Routing example

Routing table

prefix	next hop
132.177.4.0/22	C
132.177.0.0/16	B
0.0.0.0/0	A

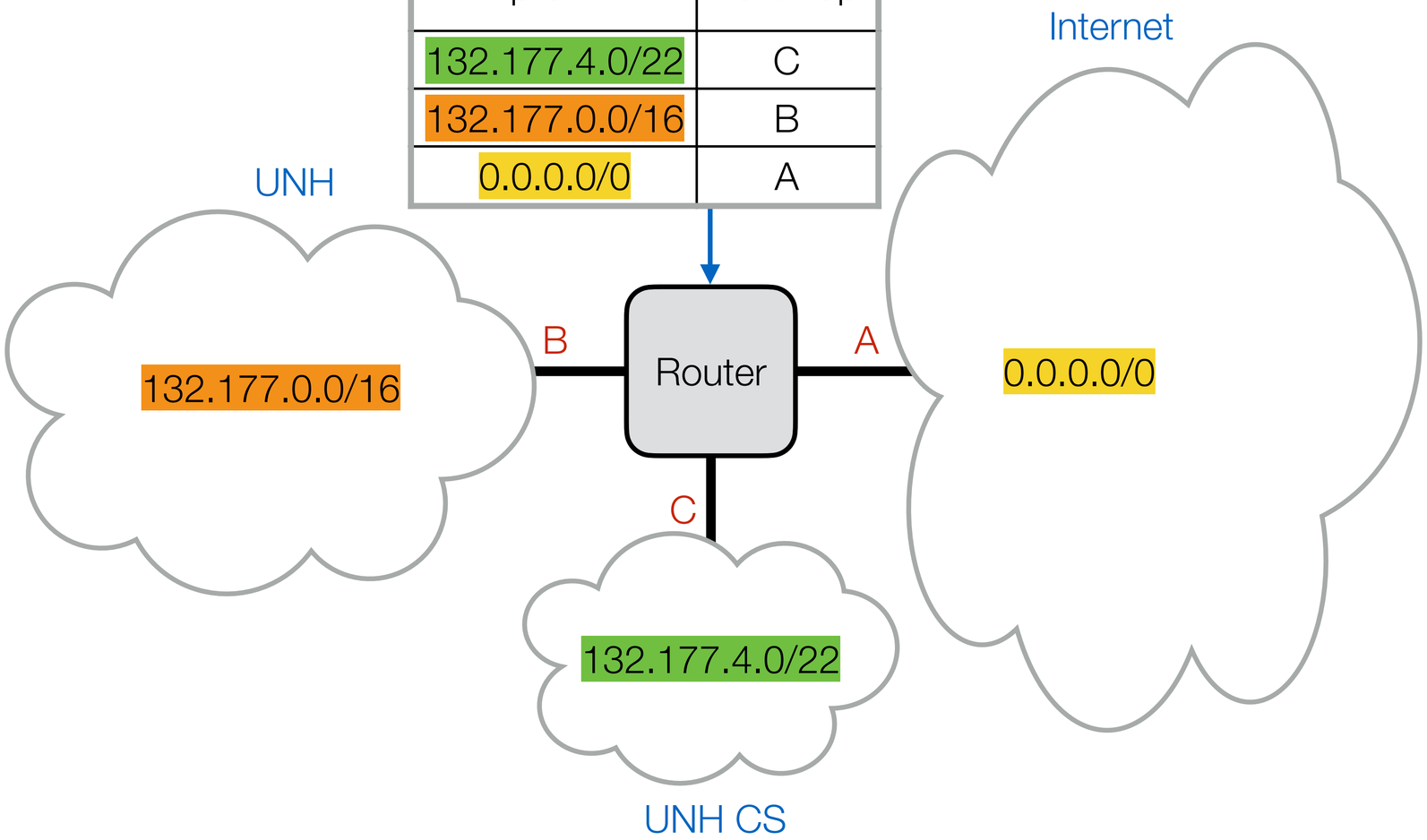

Routing example

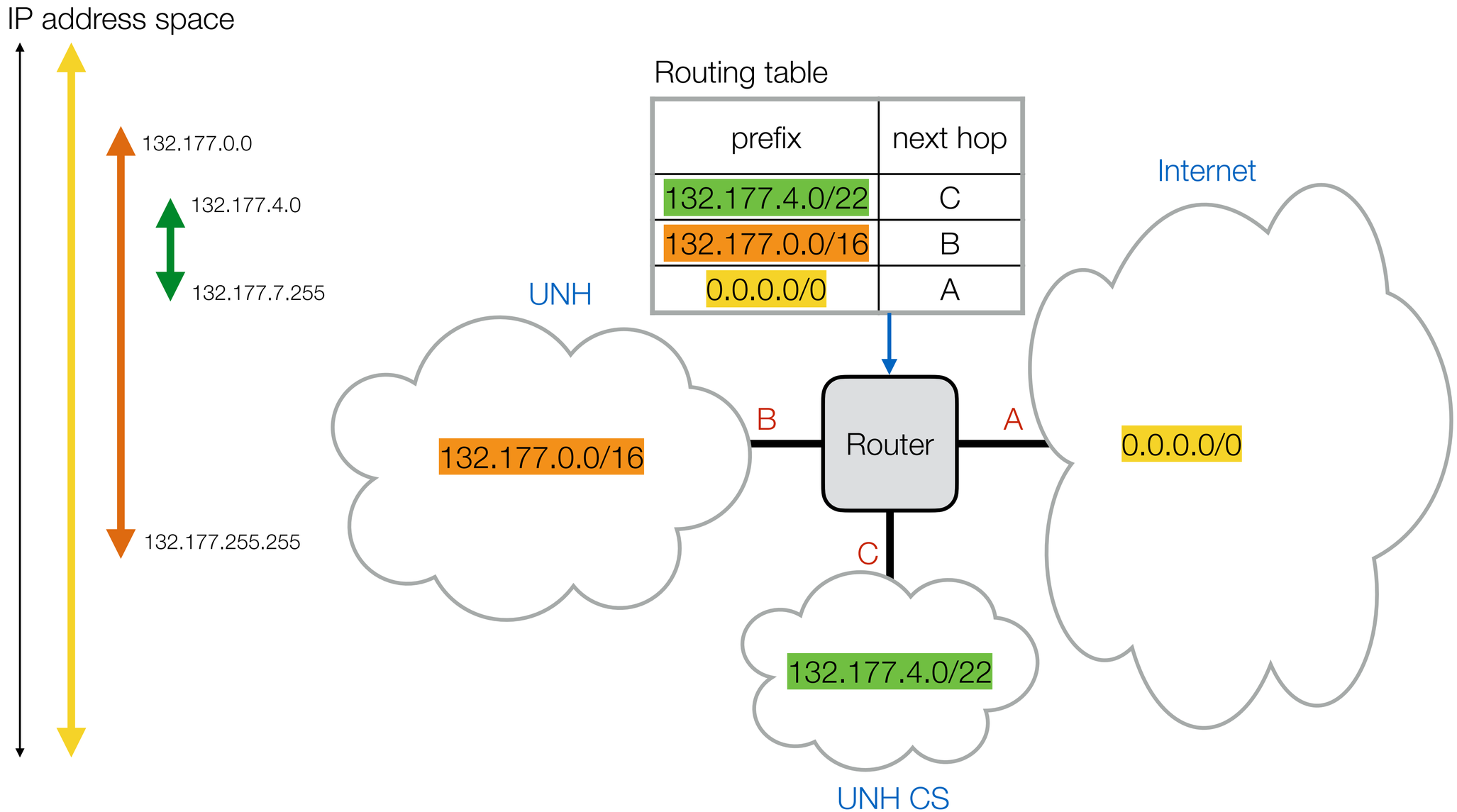

Routing example 1

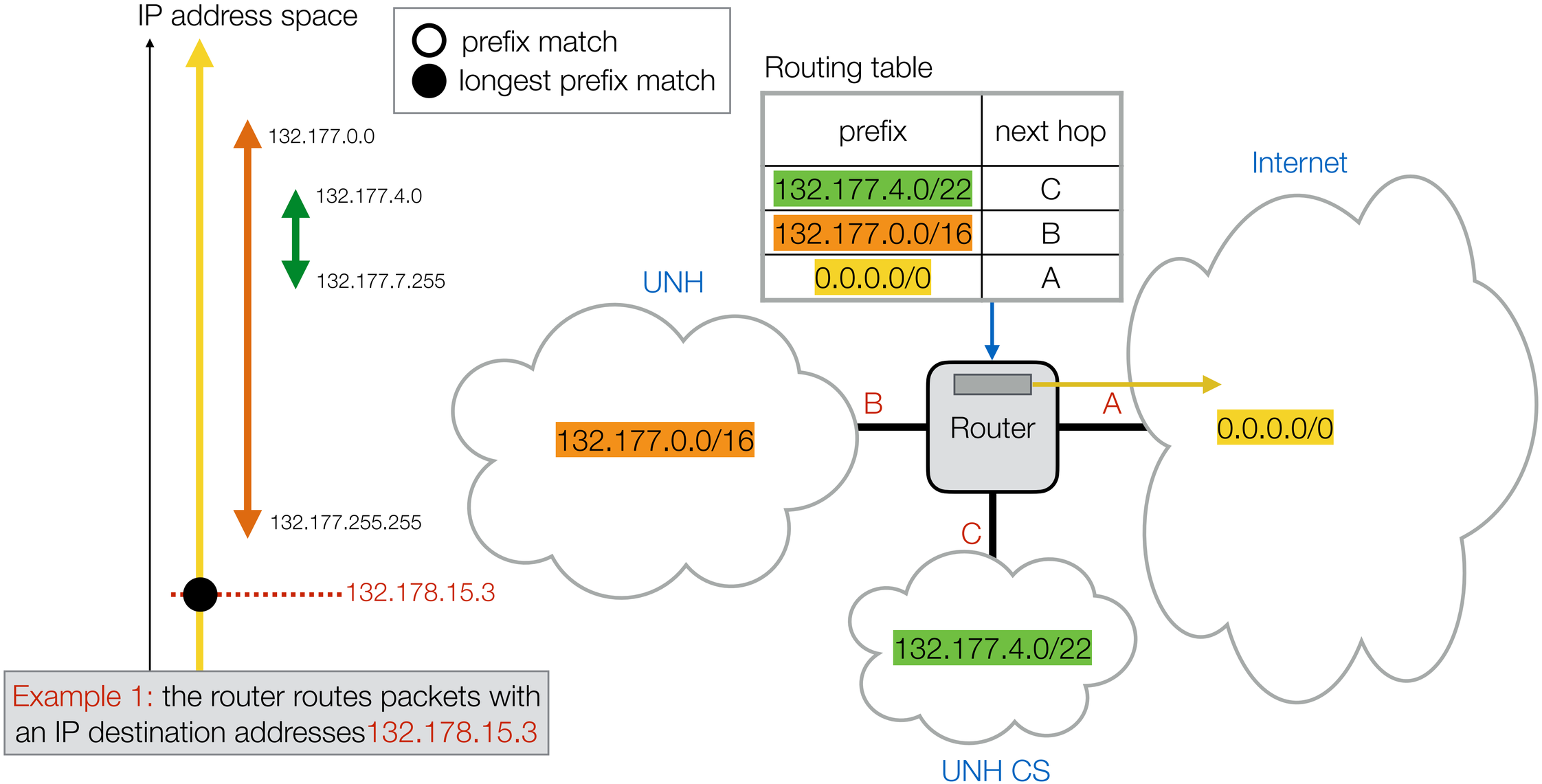

Example 1: the router routes packets with an IP destination addresses132.178.15.3

Routing example 2

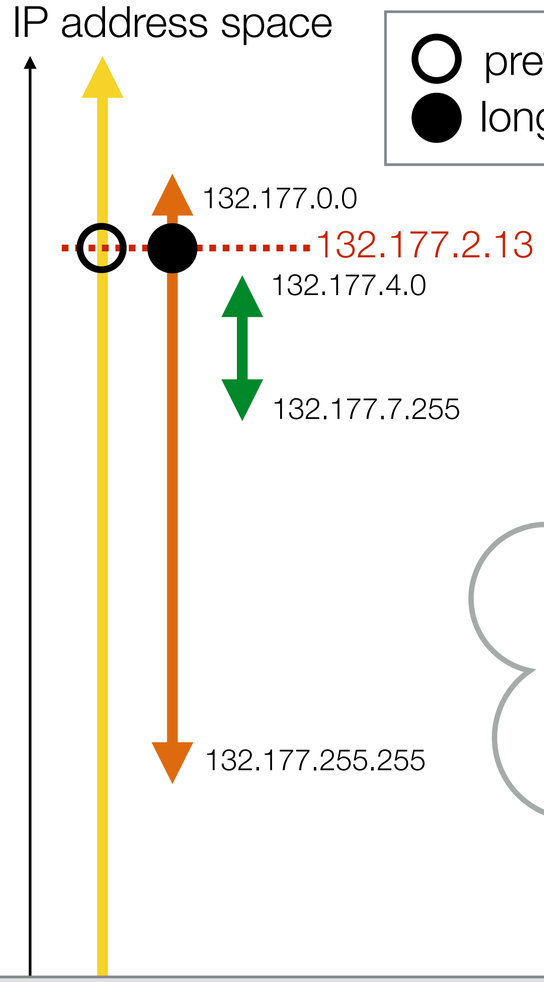

prefix match
longest prefix match

Routing table

prefix	next hop
132.177.4.0/22	C
132.177.0.0/16	B
0.0.0.0/0	A

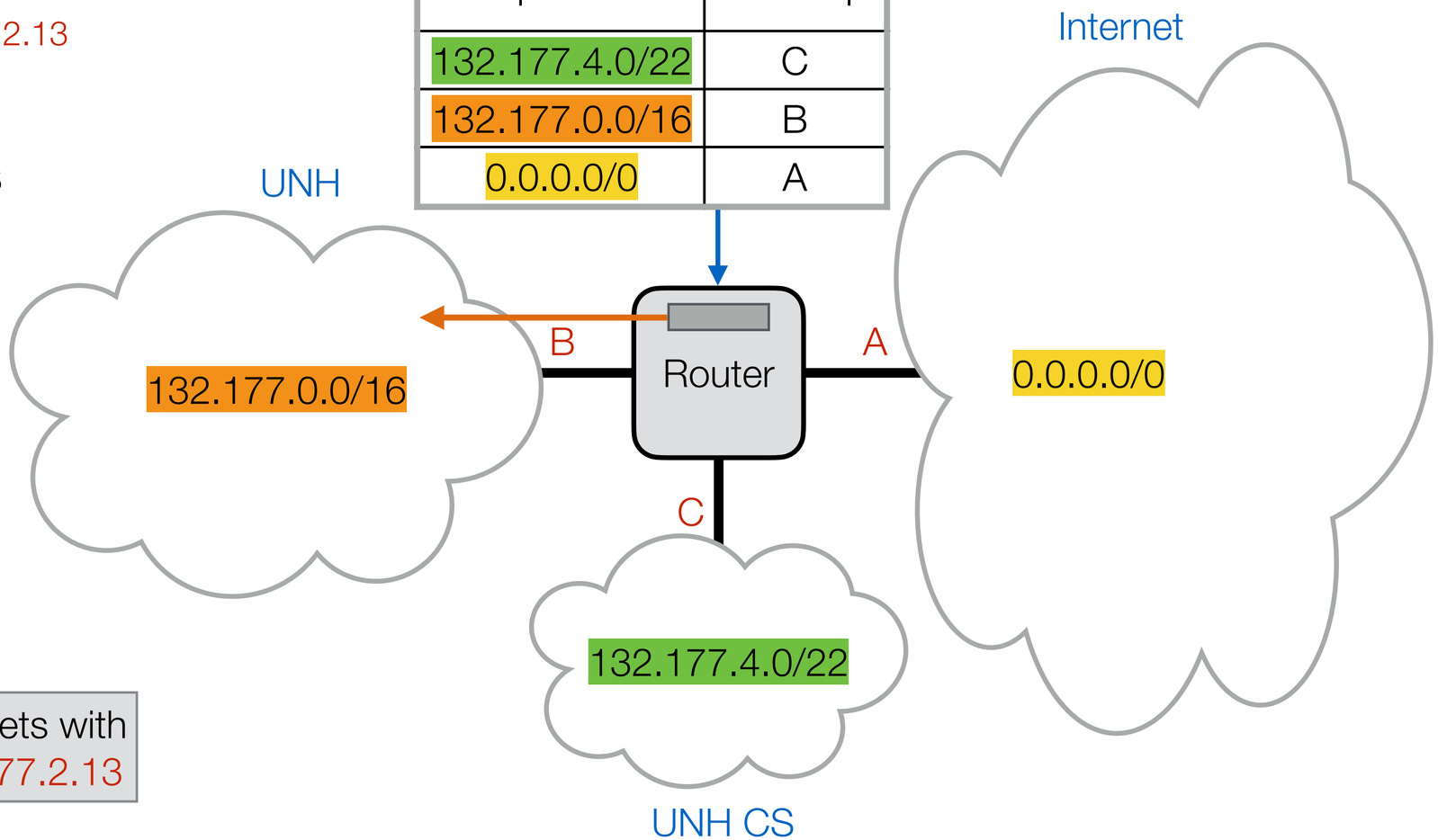

Example 2: the router routes packets with an IP destination addresses132.177.2.13

Routing example 3

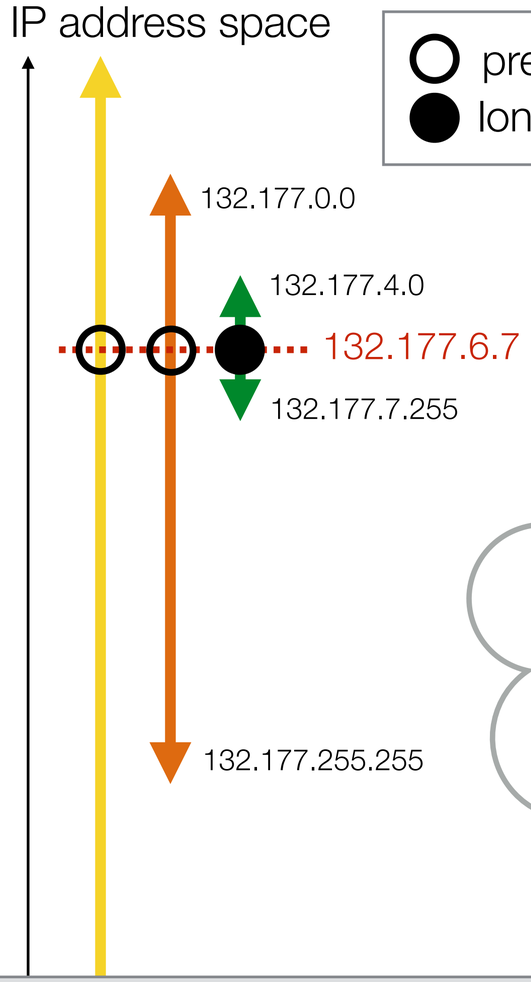

Routing table

prefix	next hop
132.177.4.0/22	C
132.177.0.0/16	B
0.0.0.0/0	A

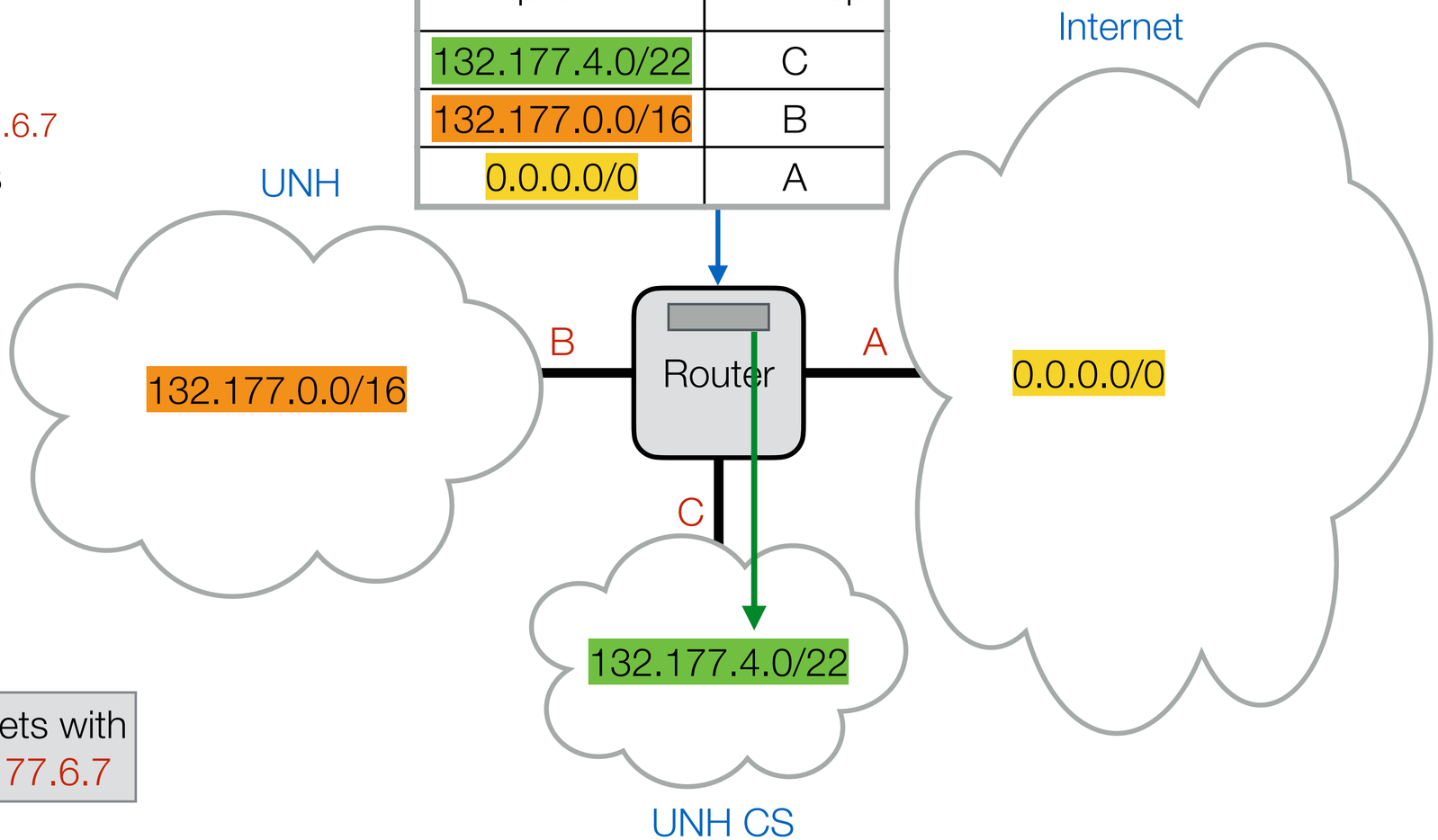

Example 3: the router routes packets with an IP destination addresses132.177.6.7

Special IP Addresses

Special Use IPv4 Addresses

- 0.0.0.0/8 - "This" network
- 127.0.0.0/8 - Loopback
- 10.0.0.0/8,
  172.16.0.0/12,
  192.168.0.0/16 - Private networks
- 255.255.255.255/32 - Limited broadcast
- 169.254.0.0/16 - Link local
- (first and last IP address of a prefix: subnet broadcast)
  - i.e., host id consisting of all zeros or all ones

Class Based Routing

Class-based Routing

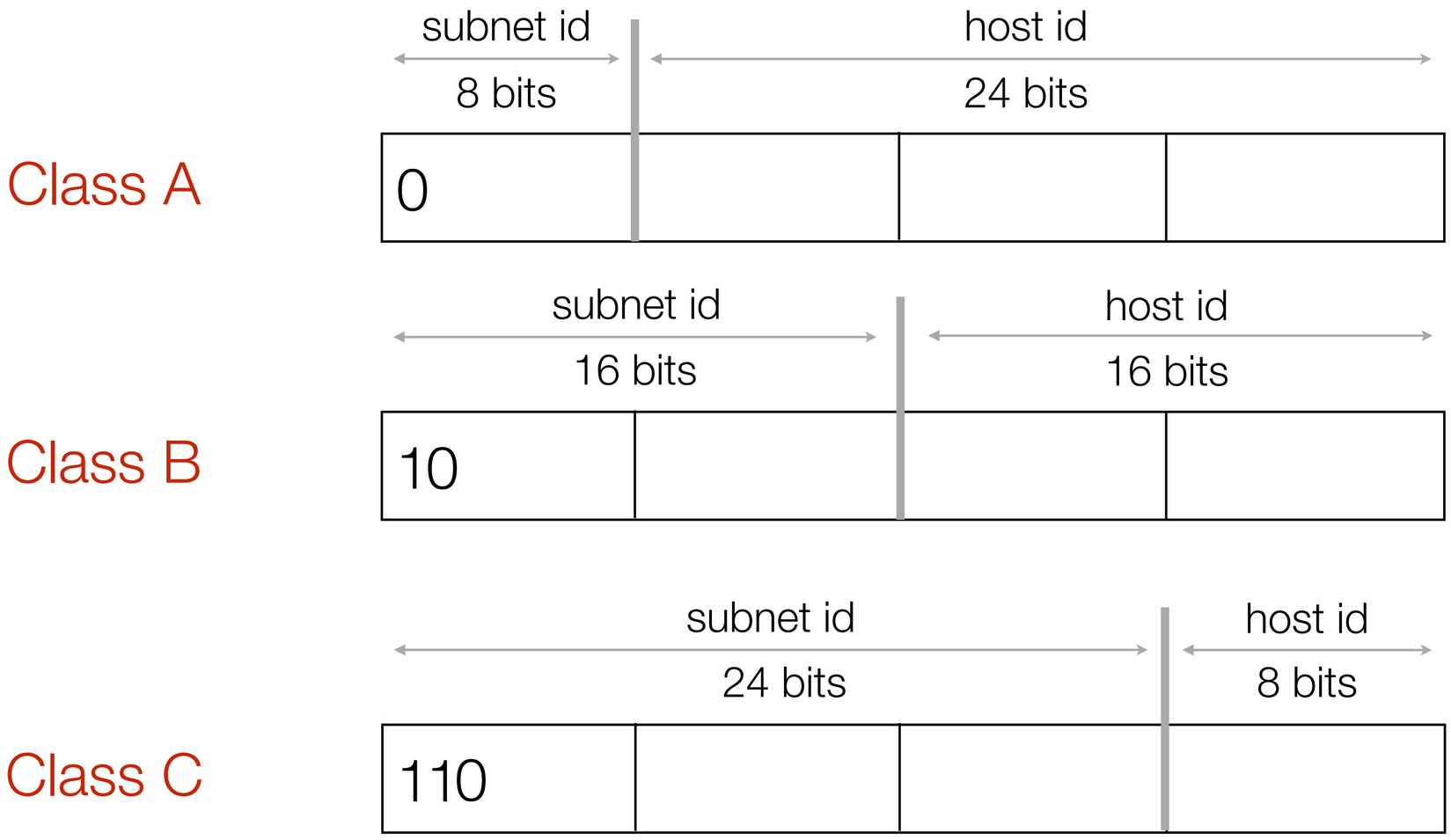

only for historical reference…

Class-based Routing

(continued…)

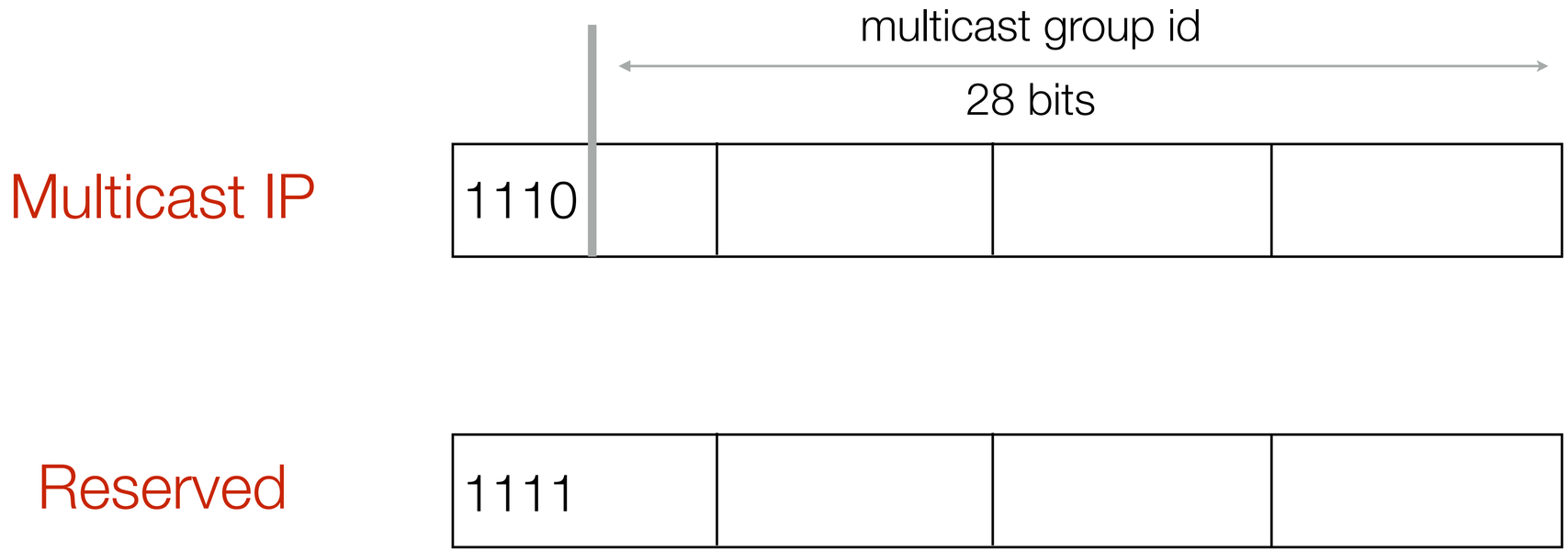

CIDR Addresses

CIDR Addresses

notation	addrs/block	# blocks	
n.n.n.n/32	1	4294967296	"host route"
n.n.n.x/31	2	2147483648	"p2p link"
n.n.n.x/30	4	1073741824	
n.n.n.x/29	8	536870912	
n.n.n.x/28	16	268435456	
n.n.n.x/27	32	134217728	
n.n.n.x/26	64	67108864	
n.n.n.x/25	128	33554432	
n.n.n.0/24	256	16777216	legacy "Class C"
n.n.x.0/23	512	8388608	
n.n.x.0/22	1024	4194304	
n.n.x.0/21	2048	2097152	
n.n.x.0/20	4096	1048576	
n.n.x.0/19	8192	524288	
n.n.x.0/18	16384	262144	
n.n.x.0/17	32768	131072	
n.n.0.0/16	65536	65536	legacy "Class B"
n.x.0.0/15	131072	32768	
n.x.0.0/14	262144	16384	
n.x.0.0/13	524288	8192	
n.x.0.0/12	1048576	4096	
n.x.0.0/11	2097152	2048	
n.x.0.0/10	4194304	1024	
n.x.0.0/9	8388608	512	
n.0.0.0/8	16777216	256	legacy "Class A"
x.0.0.0/7	33554432	128	
x.0.0.0/6	67108864	64	
x.0.0.0/5	134217728	32	
x.0.0.0/4	268435456	16	
x.0.0.0/3	536870912	8	
x.0.0.0/2	1073741824	4	
x.0.0.0/1	2147483648	2	
0.0.0.0/0	4294967296	1	"default route"

Classless Inter-Domain Routing

From **RFC 4632**:

n is an 8-bit decimal octet value.

x is a 1- to 7-bit value, based on the prefix length, shifted into the most significant bits of the octet and converted into decimal form; the least significant bits of the octet are zero.