CS 725/825 & IT 725

Lecture 5

Networking Fundamentals 3

September 13, 2023

Domain Name Service

- Mapping between hostnames and IP addresses:
  - one-to-one, one-to-many, many-to-one, or many-to-many?
  - mapping in both directions
- Possible solutions:
  - centralized database
  - fully distributed database

Domain Name Service

- Distributed, redundant, hierarchical database
  - ownership
  - characteristics of the organization (.com, .org, ...)
  - geography (.uk, .cn, .nh.us)
- Query delegation:
  - recursive
  - iterative (non-recursive)

Root Name Servers

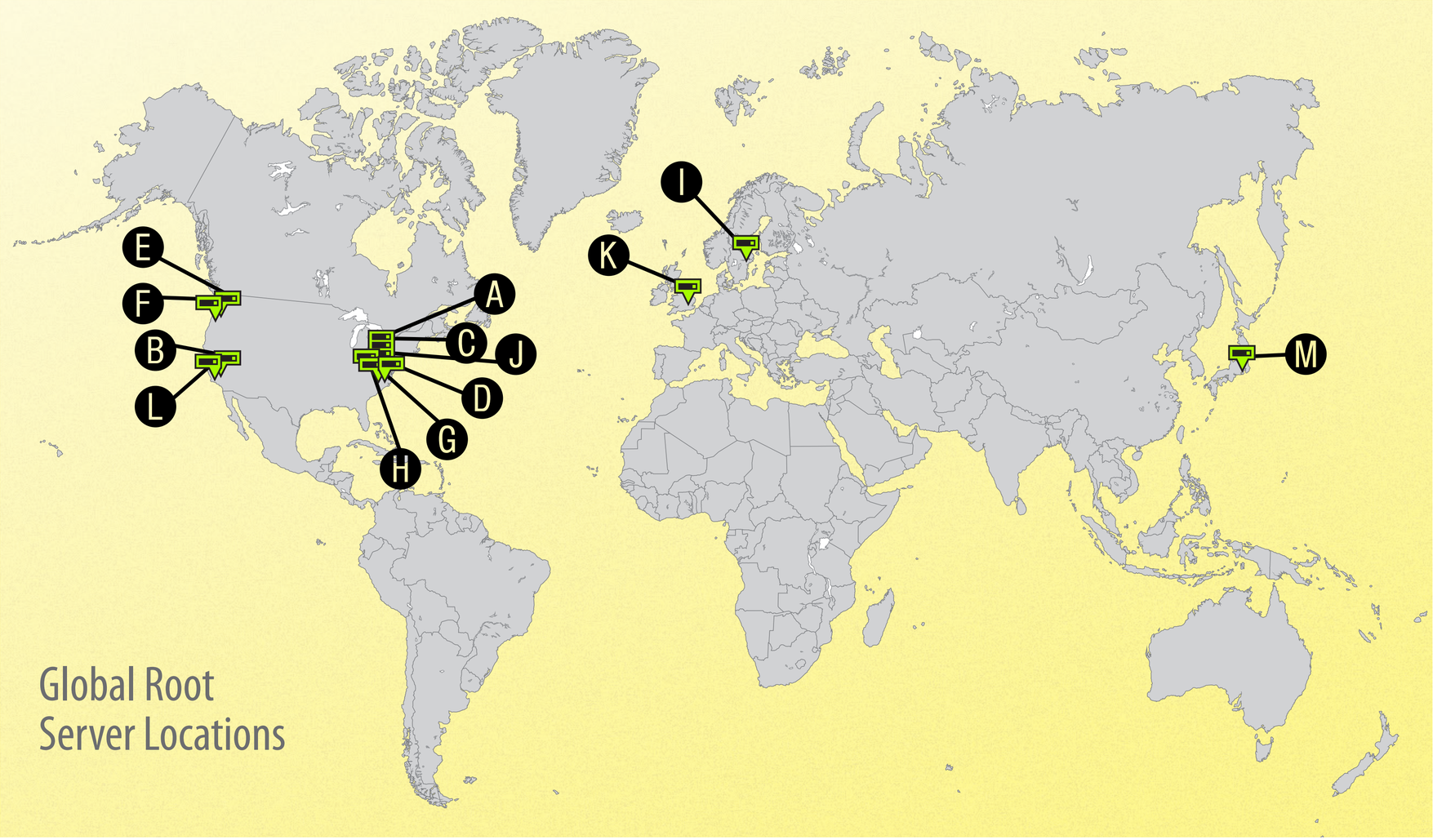

Image source: dyn.com

DNS Records (examples)

A	address record
AAAA	IPv6 address record
CNAME	canonical name record
MX	mail exchange record
NS	name server record
PTR	pointer record
SOA	start of authority record
TXT	text record

- DNS tools: nslookup, host, dig

DNS considerations

- Reliability and resilience
  - redundant servers, automatic consistency maintenance
- Performance
  - DNS lookup has to be completed before the next steps
  - “in-house” or outsourced DNS servers
- Security
  - basic protocol is not authenticated
  - recursive servers return cached responses

DHCP

- Dynamic Host Configuration Protocol
  - to obtain IP address and other configuration params
  - one or more servers on the same subnet
  - utilizes IP broadcast (255.255.255.255) and UDP

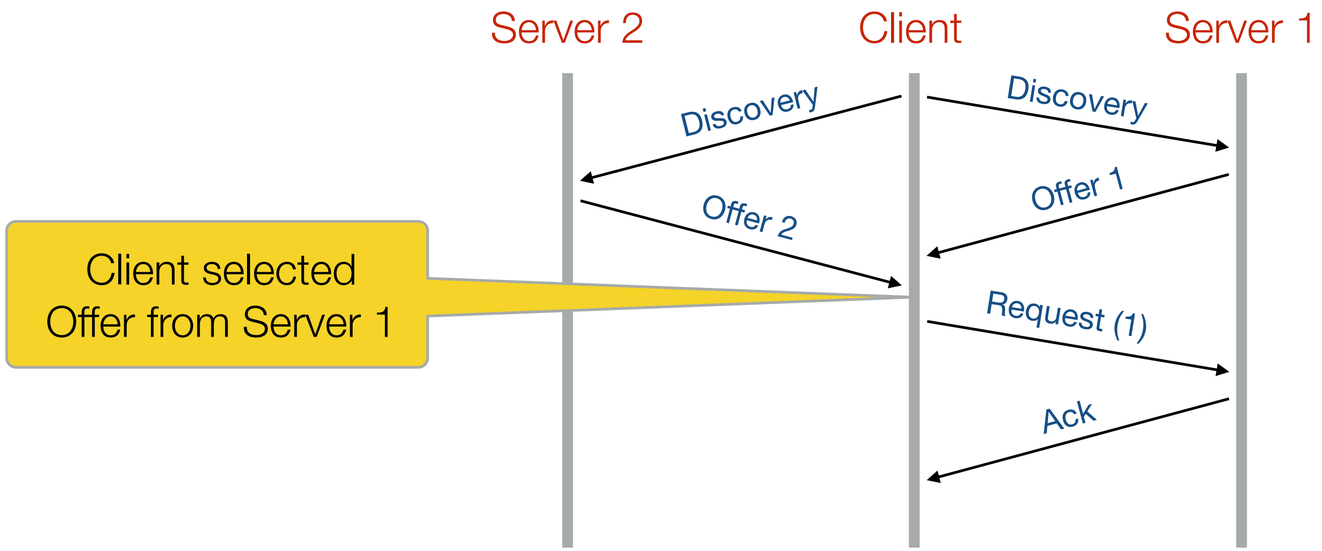

Network Layer Routing

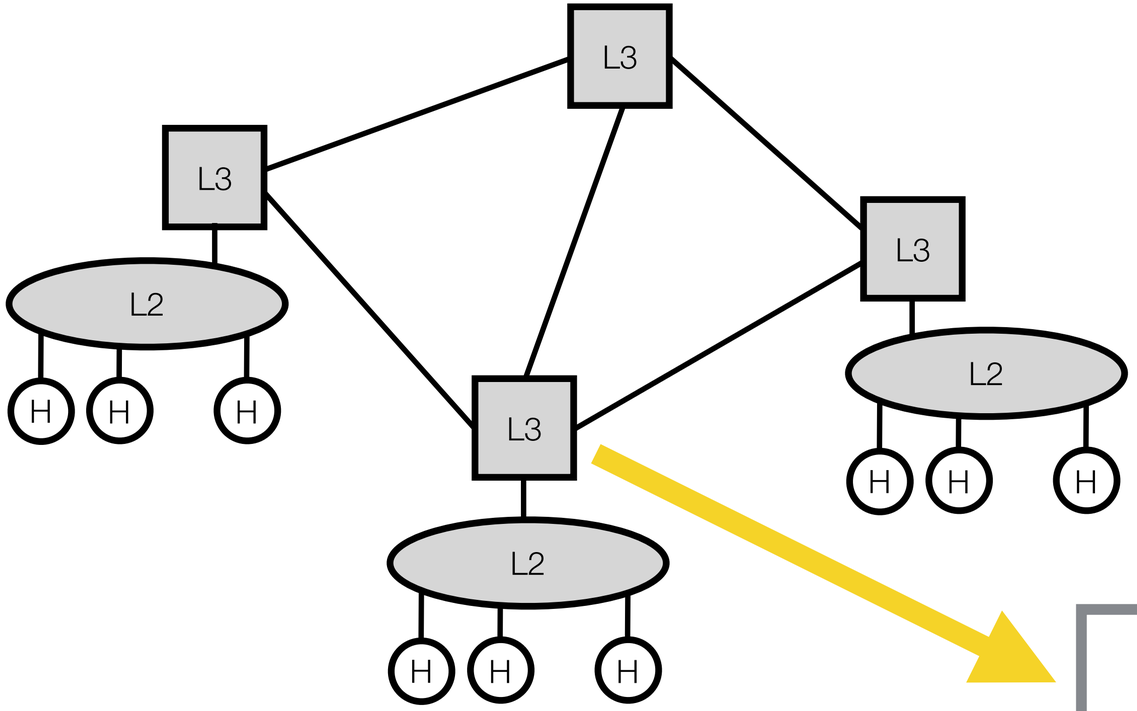

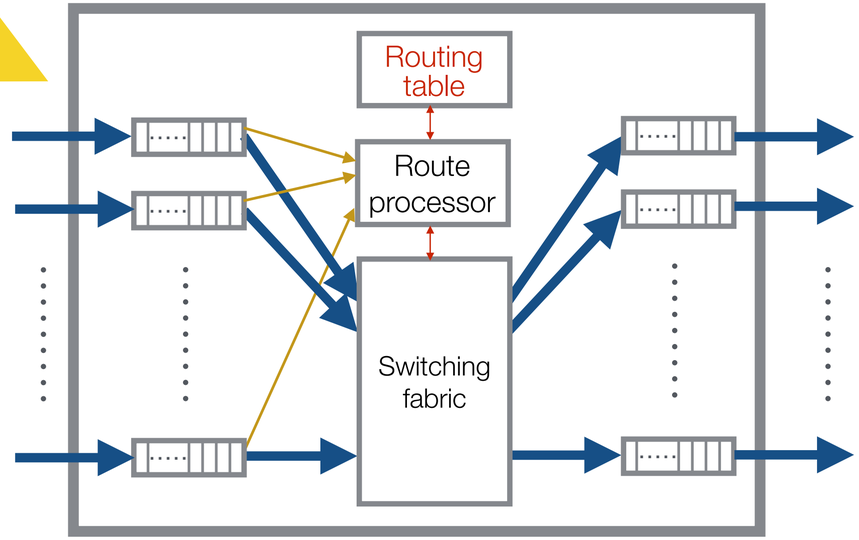

Hop-by-hop routing: your next hop is X, go there and ask for further directions

Network Layer Routing

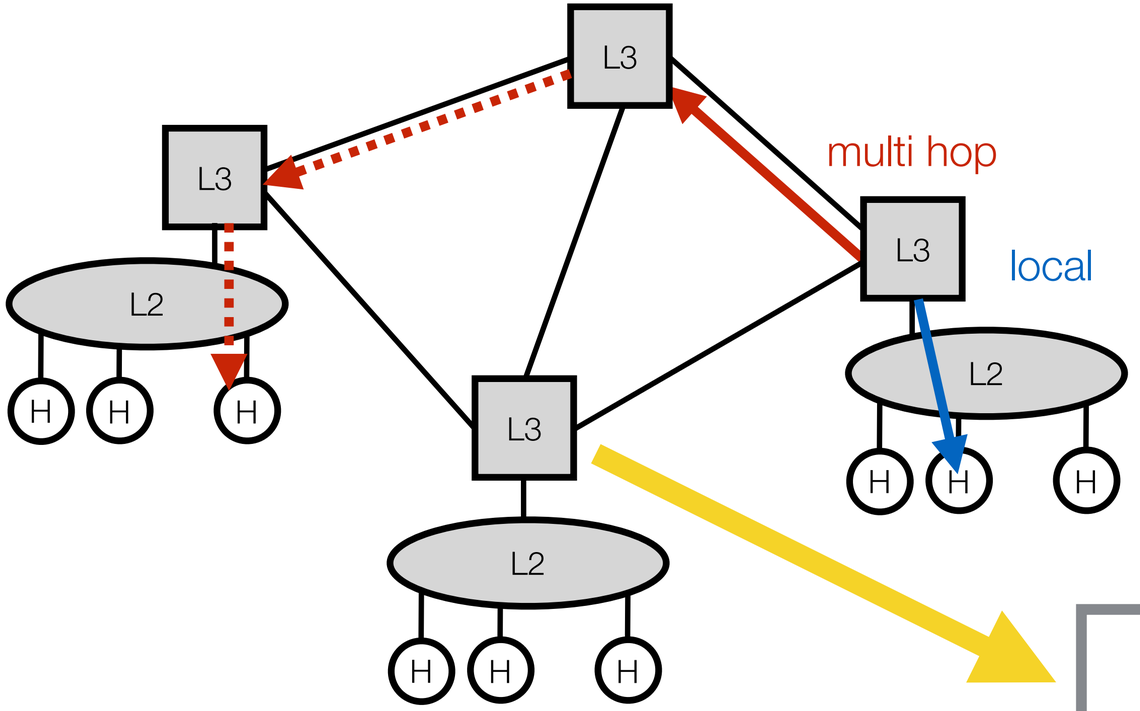

Prefix	Next hop
Prefix 1	L2 interface
Prefix 2	Next hop IP
...	...

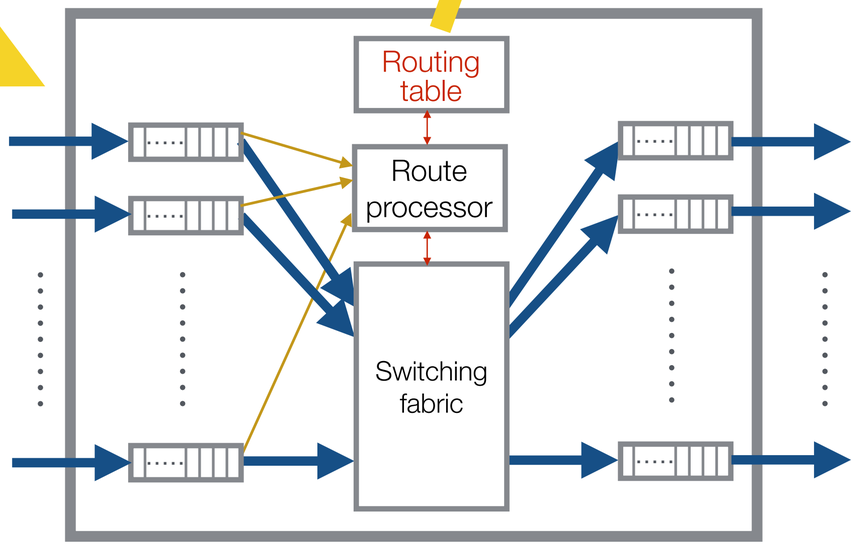

Hop-by-hop routing: “your next hop is X, go there and ask for further directions”

Routing table

Prefix	Next hop
Prefix 1	L2 interface
Prefix 2	Next hop IP
...	...

use ARP to find the MAC address of the destination

search the routing table to find the L2 interface to reach the next hop, then use ARP to find out the next hop's MAC address

Longest prefix match

Host routing table

```
rbartos@agate ~$ route
Kernel IP routing table
Destination     Gateway         Genmask         Flags Metric Ref    Use Iface
default         _gateway        0.0.0.0         UG    100    0        0 eno1np0
unh-cs          0.0.0.0         255.255.252.0   U     100    0        0 eno1np0

rbartos@agate ~$ route -n
Kernel IP routing table
Destination     Gateway         Genmask         Flags Metric Ref    Use Iface
0.0.0.0         132.177.4.4     0.0.0.0         UG    100    0        0 eno1np0
132.177.4.0     0.0.0.0         255.255.252.0   U     100    0        0 eno1np0
```

"-n" = do not resolve IP addresses

132.177.4.0/22 → local delivery via interface eno1np0
(do ARP for the destination IP)

0.0.0.0/0 (everything else) → send to _gateway
132.177.4.4 via eno1np0
(do ARP for 132.177.4.4)

Host routing table

```
rbartos@agate ~$ route
Kernel IP routing table
Destination     Gateway         Genmask         Flags Metric Ref    Use Iface
default         _gateway        0.0.0.0         UG    100    0        0 eno1np0
unh-cs          0.0.0.0         255.255.252.0   U     100    0        0 eno1np0

rbartos@agate ~$ route -n
Kernel IP routing table
Destination     Gateway         Genmask         Flags Metric Ref    Use Iface
0.0.0.0         132.177.4.4     0.0.0.0         UG    100    0        0 eno1np0
132.177.4.0     0.0.0.0         255.255.252.0   U     100    0        0 eno1np0
```

"-n" = do not resolve IP addresses